EVENLITE

Lives Depend On Us

PROJECT NAME:	APPROVED BY:
CATALOG NO:	TYPE NO:

LUCENTA - PHOTOLUMINESCENT EXIT SIGNS

The Way To Glow

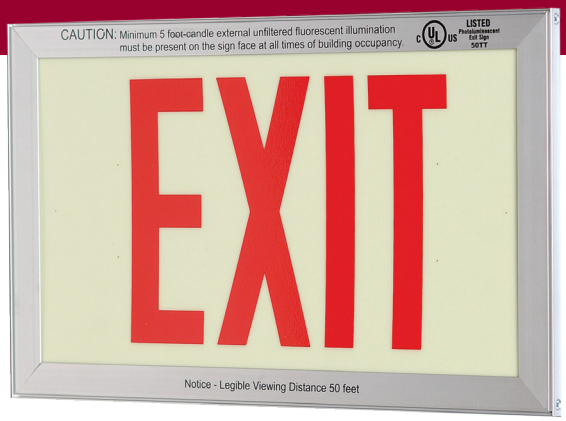

Wall Mount

THE LOOK OF QUALITY

"Glowing with Light," the Lucenta Photo Luminescent exit sign series utilizes high performance, long after-glow strontium oxide aluminate Photo Luminescent pigment molded into a rigid self-extinguishing PVC sheet.

Panels are framed with a unique channel lock and low-profile aluminum extrusion, making for superior durability and quality appearance.

50 foot or 75 foot rated viewing distance to order, LUC75 uses a rigid aluminum photoluminescent panel with red or green letters.

Construction

- Universal frame – single/double face signs
- Hidden mounting hardware (supplied) on surface wall mounted signs enhances quality appearance and restricts both access and removal
- Supplied with universal canopy for ceiling or end mounting
- Chain and pendant mounting kits available to order

Electrical

- Non-electrical photoluminescent panel has 6" high letters with 3/4" stroke and field applicable chevron directional indicators

Illumination

- Requires only 5 foot candles (54 lux) of unfiltered fluorescent lighting for 60 minutes to activate (must be externally illuminated during normal building occupancy)
- 25+ years life expectancy
- LUC75 is a 75 foot rated sign and has 7" high letters with 1" stroke to provide legible viewing at 75 feet for a 90 minute duration

Certification

- Meets NFPA101 Life Safety Code and OSHA requirements
- UL 924 listed to provide legible viewing at 50 feet - 90 minutes duration
- UL 1994 listed for floor proximity use, 6" letters with 3/4" stroke
- Buy American Act compliant

ORDERING GUIDE – LUC

Example: LUC-R-1-BA-U-CM

Model	Legend Color	No. of Faces	Frame Color	Mounting	Options
LUC (rated 50' viewing Distance) **LUC75** (rated 75' viewing distance)	**R** Red Legend **G** Green Legend	**1** Single Open Face **2** Double Open Face	**BA** Brushed Aluminum **WH** White Finish **BK** Black Finish **CC** Custom Color	**U** Universal ** The Universal can be wall or ceiling mounted*	**CW** Custom Wording **LS** Polycarbonate Legend Shield **CM** Chain Mount **PA** 12" Swivel Pendant Mount **PB** 24" Swivel Pendant Mount **PC** 36" Swivel Pendant Mount **PD** 48" Swivel Pendant Mount **SA** 6" Int' Symbol of Accessibility
LUC					

Fill in fields from categories above and complete type and part number.

Type Number:	***Full Part Number:***

2575 Metropolitan Drive | Trevose, PA 19053 | T: 1.800.872.0879 | F: 215.244.4208 | mail@evenlite.com | www.evenlite.com

Lucenta Photoluminescent Exit Sign

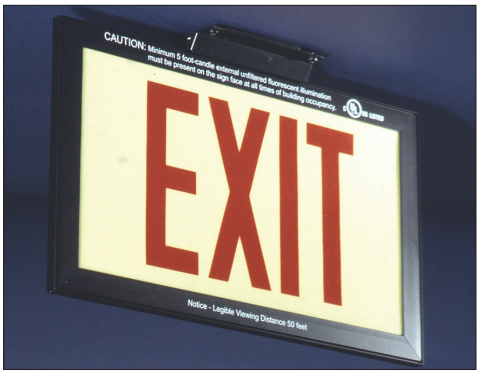

Top or Side

Chain Attachment

Energized Sign

ACCESSORY KITS

LUC2R	Double Faced Red Panel Kit converts single face unit to double
LUC2G	Double Faced Green Panel Kit converts single face unit to double
LUCCM	Chain Mount Kit

Swivel Pendant Mount Kits

LUCPA	12”
LUCPB	24”
LUCPC	36”
LUCPD	48”

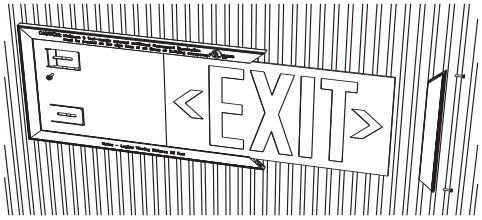

Wall Attachment

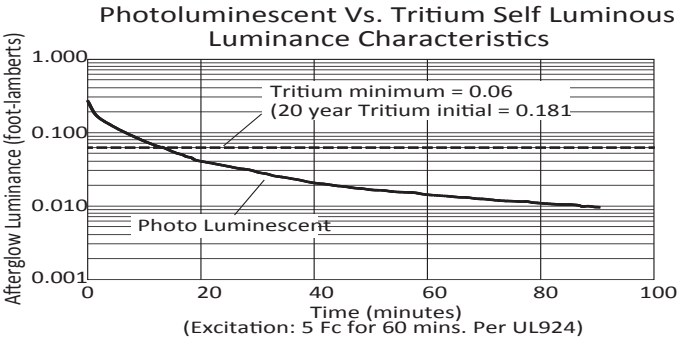

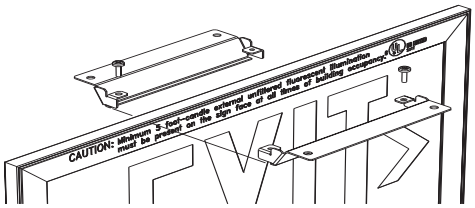

Top or Side Canopy Attachment

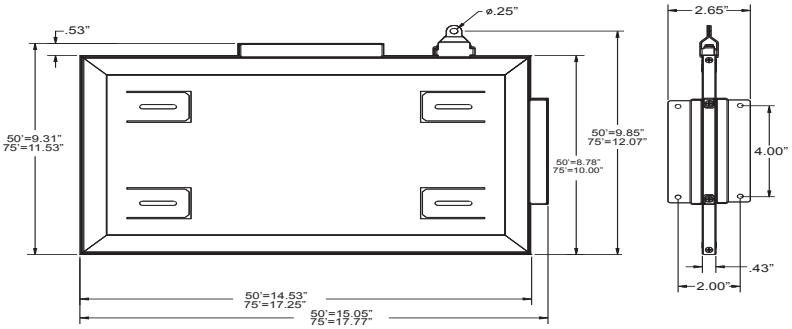

Frame Dimensions

EVENLITE

Lives Depend On Us

www.evenlite.com