EVENLITE

Lives Depend On Us

PROJECT NAME:	APPROVED BY:
CATALOG NO:	TYPE NO:

MIRRORLITE - ARCHITECTURAL RECESSED EMERGENCY LIGHT

OUT OF SIGHT UNTIL YOU NEED IT

Recently updated and dramatically enhanced, Mirrorlite offers performance and features that shine out – right when you need them. Mirrorlite-SD is a unique recessed emergency light that hides away during normal lighting conditions. Upon the loss of AC power the Mirrorlite doors open and illuminate your exit path by projecting high-powered MR16 Halogen light. Upon restoration of AC power the Mirrorlite doors quietly close to the concealed position. Mirrorlite is ideal for all internal applications where a quality architectural appearance is preferred.

Unit blends with wall or ceiling

Emergency mode

Construction

- Continuous cam, precision motor drive. No gears, cogs, limit switches or sensitive solenoid settings to jam or seize
- Doors are factory set for optimum performance but can be individually field adjusted to suit any application
- Finished in durable light textured off-white powder coat which can be wall papered or field painted. Custom finishes available to order
- Soft-close doors prevent early lamp failure due to door slamming
- Suitable for mounting heights up to 50', dependent upon lamp wattage selected
- Fully automatic operation suitable for wall or ceiling mount installation
- Compact, one-size recessed housing is provided with fully adjustable mounting hardware to suit virtually all mounting applications
- Self-adjusting frame trim and door assembly with no external mounting hardware
- Modular assembly and quick connector wiring provides for fast installation and ease of maintenance

Electrical

- Solid state microprocessor controlled circuitry includes line latch, brown out and battery LVCO
- Extended run times or remote capacity available
- Computerized electronic circuitry with self-test and self-diagnostics included as standard in all units
- Field selectable 120 or 277 VAC 60 Hz input. Consult factory for other input voltages
- Automatic, discreet monthly self-testing. Self-diagnostics monitors lamp load, transfer circuit, battery capacity, door operation and motor drive
- Soft-start lamp circuit ensuring extended lamp life
- Choice of Lead Calcium or Nickel Cadmium batteries in unit capacities up to 150 watts

Illumination

- MR16 long life halogen lamps available up to 75 watts each
- Up to 150' (spacing dependent upon lamp selected and field conditions)
- Four selectable lamp positions for each lamp takes the guess work out of lamp aiming and assures optimum light distribution
- New optics optimize light pattern to improve uniformity and spacing

Certification

- Approved for use in New York City Calendar # 48849 tested, approved and listed by Underwriters Laboratories Inc. to UL 924, meets NFPA 101 Life Safety Code, NFPA 70-NEC and OSHA requirements
- Optional infrared remote transmitter with selectable 30 second or 90 minute duration tests
- Buy American Act compliant

Warranty

- 3 Year Limited Warranty

ORDERING GUIDE – MIR-SD

Example: MIR-SD-50-LC-2H-UI-RI

Model	Lamp Selection	Battery Type	Run Time	Mounting	Options
MIR-SD Mirrorlite Self-Test/ Self-Diagnostic Emergency Light	20 (40 Watts)	**LC** Sealed Lead Calcium **NC** Nickel Cadmium	2H (120 min) 4H (240 min)	Mounting Is Universal (Wall and/or Ceiling) **UI** Back Box & Fixture Shipped Complete **UP** Back Box Pre-Shipped	**CC** Custom Color (Specify) **CP** Chicago Plenum Listed **DL** Damp Location **RI** Remote Diagnostic Indicator **RM** Fused Remote Output Leads **TLRT** Infrared Remote Testing Transmitter (order separately, typically only 1 or 2 are required per site) **TD** 15 Minute Time Delay
	35 (70 Watts)	**LC** Sealed Lead Calcium **NC** Nickel Cadmium	2H (120 min) 3H (180 min)		
	50 (100 Watts)	**LC** Sealed Lead Calcium **NC** Nickel Cadmium	90 (90 min) 2H (120 min)		
	75 (150 Watts)	**LC** Sealed Lead Calcium **NC** Nickel Cadmium	90 (90 min)		
MIR-SD					

Fill in fields from categories above and complete type and part number.

Type Number:	***Full Part Number:***

Mirrorlite MIR-SD Recessed Emergency Light

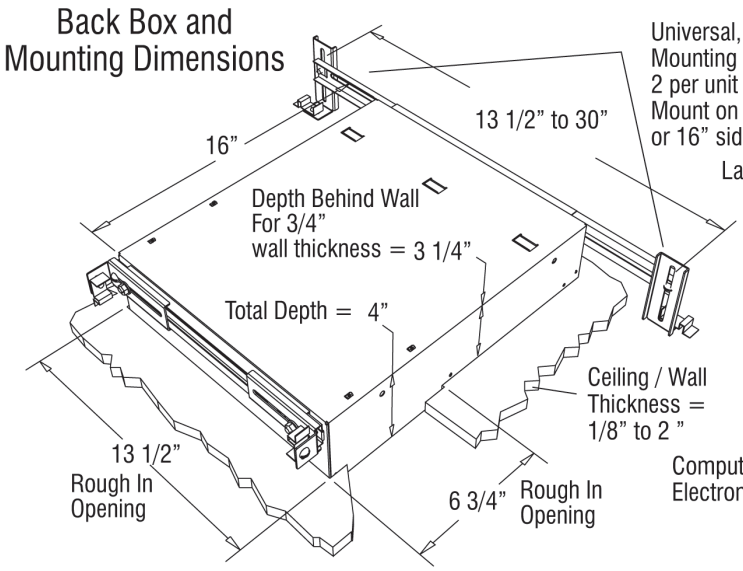

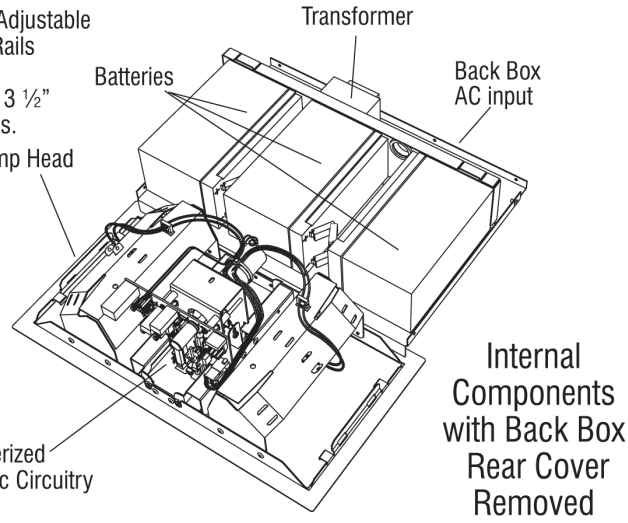

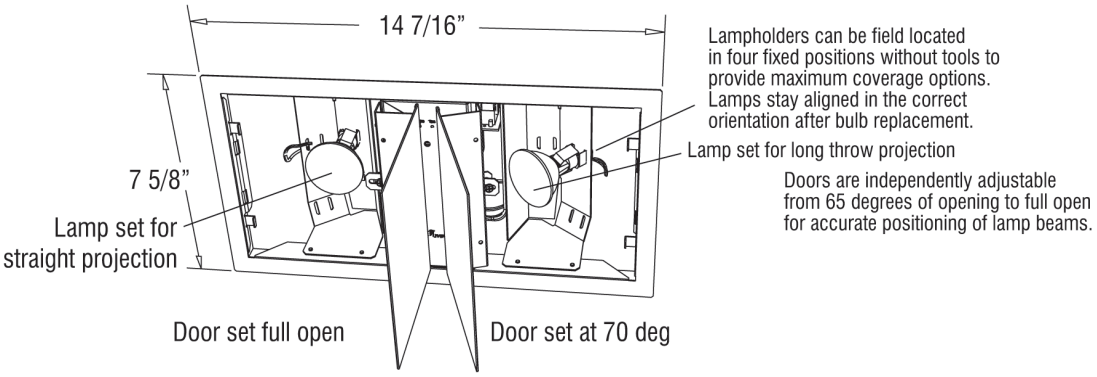

Mounted Dimensions (doors open)

Front Panel Diagnostic Display

- Hi Charge – Red
- Float / Full Charge – Green

Diagnostic Functions

- 2 Battery Failure – Red Flash
- 5 Lamp Failure – Red Flash
- 1 Transfer Failure – Red Flash
- 3 Charger Failure – Red Flash
- 4 Door Failure – Red Flash
- Insufficient Charge – Red/Grn
- In Test – Green Flash

EVENLITE

Lives Depend On Us

www.evenlite.com