EVENLITE

Lives Depend On Us

PROJECT NAME:	APPROVED BY:
CATALOG NO:	TYPE NO:

PWII - Mini Dimming Inverter

Available in 125W, 250W, 375W and 550W sizes

The Pure Wave II (PWII) was built upon our industry proven PW-Series to engineer a new Dimmable Class of Lighting Inverters with serviceability and flexibility at the forefront of design. Equipped with Pure Sine Wave output, 10X crest factors to punch through the most demanding inrush requirements, 3 or 4 (model specific) configurable lighting zones for seemless system integration, field-selectable Input/Output AC voltages, and ultra-low standby power consumption to meet the California Energy Commission requirements. The PWII offers an industry-leading option of up to 4 channel (model specific) DALI / 0-10V transfer circuits with independent selectable preset dimming levels for each output.

PWII 25-55

PWII-12

Quick Specs

Input Voltage ..... 120/277 VAC Field Selectable

Max Connected Load....Up to 375W for 120W and 250W models, Up to 1,125W for 375 and 550W models

Output Voltage ..... 120/277 VAC Field Selectable

Output Power 125W (PWII-12), 250W (PWII-25), 375W (PWII-37), 550W (PWII-55)

Load Type ..... LED, Fluorescent, Incandescent

Transfer Time..... 50mS / 1S / 2S User Selectable

Operating Time..... 90 Minutes

Overload Capability ..... Up To 110%

Frequency Regulation..... 60Hz +/- 0.02 Hz crystal controlled

Crest Factor 10X (125W), 5X (250W), 7.5X (375W), 5X (550W)

Load Power Factor..... 0.5 lead to 0.5 lag

Operating Temperature ..... 20 - 30 °C

Battery Type ..... Valve Regulated Lead Acid (VRLA)

Approval ..... UL924 Listed

Features

- Field-selectable 120 or 277 VAC Input/Output
- User adjustable transfer time for application flexibility
- Provides 3 (125/250W models) or 4 (375/550W models) individually controlled Dali / 0-10V zones each with 5 preset levels of 100%, 80%, 60%, 40% & 20%
- FD option includes Fire Alarm 0-24V AC/DC interface
- 1x Normally-On, 3 or 4x (model specific) configurable types for ultimate load flexibility
- Advanced Startup, Charger, and Inverter Diagnostics for prevention of field failures, overloads and miswires
- Automatic Self-Testing / Self-Diagnostics included as standard
- High purity premium maintenance-free Valve Regulated Lead Acid (VRLA) batteries with thicker plates for long standby life and durability (10-12 year design life)
- T-Bar Mount available in 125 watt model

BUY AMERICAN ACT BAA COMPLIANT

c UL us LISTED

ORDERING GUIDE – PWII

Example: PWII-25-LC-FD

Model	Wattage/VA	Battery Type	Options	Optional Dimming Preset
PWII	**12** 125 Watts/VA **25** 250 Watts/VA **37** 375Watts/VA **55** 550 Watts/VA	**LC** Lead Calcium	**FD** 3 or 4 (model dependent) Independent Dimming Zones (via 0-10V / DALI) / 1 x Fire Alarm Interface (See Optional Dimming Preset) **AA** Audible Alarm **DT** 2 Second Delayed Transfer **RT** Remote Test Switch and Monitor (includes Audible Alarm IR receiver, Test Switch and SD indicator) **TLRT** Infrared Remote Hand Held Transmitter to suit RT option (ordered separately) **TB** T-Bar Mount Housing (125 watt only) **2H** 2 Hour Run Time Capacity reduced to 100 and 200W respectively **CL** Canadian Listed to CSA C22.2 No. 141-10 **Z4** Seismic Zone 4 Restraints **UP** Pre-Shipped Less Battery	**Blank** No Factory Set Dimming **Output 1** 11=100% 12=80% 13=60% 14=40% 15=20% **Output 2** 21=100% 22=80% 23=60% 24=40% 25=20% **Output 3** 31=100% 32=80% 33=60% 34=40% 35=20% **Output 4** 41=100% 42=80% 43=60% 44=40% 45=20%
PWII				

Fill in fields from categories above and complete type and part

Type Number:	***Full Part Number:***

PWII - Mini Dimming Inverter

Input

- Voltage: 120 or 277 VAC – field configurable
- Current: 125W Model 1.4A @ 120V, 0.6A @ 277V
  250W Model 2.7A @ 120V, 1.2A @ 277V
  375W Model 4.10A @ 120V, 1.19A @ 277V
  550W Model 5.95A @ 120V, 1.98A @ 277V
- Frequency: 60Hz +/- 2 Hz
- Protection: Easy access 8A fast acting 5x20 mm fuse.
- Power Factor: 0.5 lead to 0.5 lag

Output

- Voltage: 120 or 277 VAC (follows Input Voltage selection)
- Current: 125W Model 1.04A @120V, 0.45A @ 277V
  250W Model 2.08A @120V, 0.9A @277V
  375W Model 3.12A @120V, 1.35A @ 277V
  550W Model 4.85A @120V, 1.98A @277V
- Frequency: 60Hz +/- 0.02 Hz crystal controlled (EM mode)
- Overload Capability: Up to 110%, @ 110% unit will generate overload fault
- Configurable Transfer Times: 50mS, 1s (default), 2s
- Output Distortion: Less than 3% THD
- Crest Factor: 10X for 125W, 5X for 250W, 7.5x for 375W and 5x for 550W model
- Load Power Factor: 0.5 lead to 0.5 lag
- Output Types: 1x Normally-On, 3x configurable Normally-Off/ Switched, for 125 and 250W Models, one normally on and 4x configurable Normally-Off/Switched for 375 and 550W Models
- Max Connected Load w/ Dimmer option: 375W for PWII-12 & PWII-25; 1,125W for PWII-37 & PWII-55 (Non-EM Mode)

Construction

- NEMA Type 1 enclosure:
  PWII 12 & 25, 18Ga epoxy powder coated Cold Rolled Steel (CRS)
  PWII 37 & 55, 14Ga epoxy powder coated Cold Rolled Steel (CRS)
- Cooling by natural convection – no internal fans
- Electrical Knock Outs (EKO's) for ½" and ¾" conduit provided on three surfaces

Weights & Dimensions

Model	Inverter Weight	Battery Weight
PWII-12	33 lbs.	INCL
PWII-12 T-Bar	36 lbs.	INCL
PWII-25	29 lbs.	37 lbs.
PW37	43 lbs.	57 lbs.
PW55	43 lbs.	77 lbs.

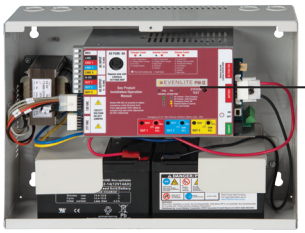

Battery

- Long-Life Valve-Regulated Lead Acid (VRLA)
- Ultra efficient 3-rate, temperature-compensated charger
- Automatic Low Voltage Disconnect (LVD) set at 1.67 VPC
- 24 Hour Recharge Time
- Runtime: 90 Minutes at 25C°
- DC Voltage: 24 VDC Nominal, 2.27 VPC float, temperature compensated
- DC Current: 6.2/12.4 ADC Nominal (125/250 Watt model)
  18.25/27 ADC Nominal (375/550 Watt model)

Environmental

- Operating Temp: 20C° to 30C°
- Storage Temp: Electronics - 20C° to 70C°, Batteries - 0C° to 40C°
- Relative Humidity: <95 % (non-condensing)

Certifications & Compliance

- UL924 Certified
- NEMA 410 load tested up to 375W (125,250W models), 1,125W (375, 550W models)
- NFPA 101 Life Safety Code
- NFPA 70 - NEC
- New York City approved, Calendar Number 51575
- NEMA Type 1 Enclosure
- Buy American Act compliant

Warranty

- 3 Year Limited Electronics Warranty – view complete terms on-line @ www.evenlite.com/warranty/terms
- 3 Year Full / 7 Year Pro-Rata Battery Warranty

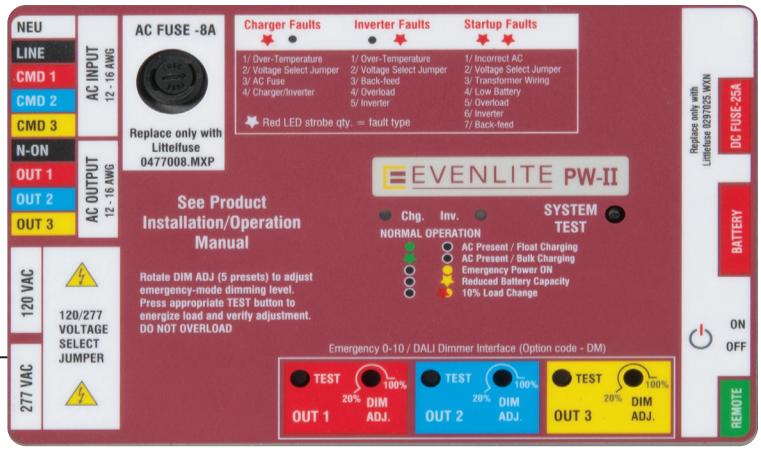

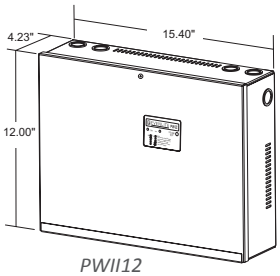

PWII12

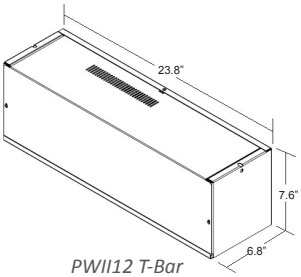

PWII12 T-Bar

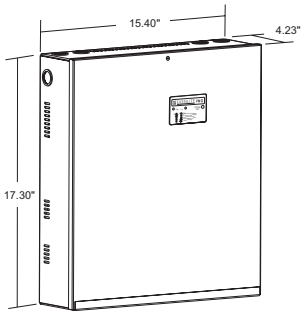

PWII25

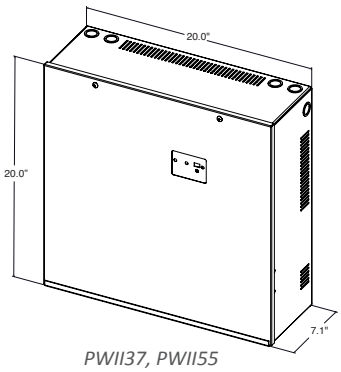

PWII37, PWII55

PWII - Mini Dimming Inverter

Dimming Explained

The Diagram to the right is an example of a typical wiring application where a single Area/Room contains both Normal Lights and Emergency Lights. The PWII passes the 0-10V signal through itself when Utility power is present.

Once in EM Mode, the PWII bypasses the Area/Room dimmer and supplies the 0-10V Dimming Signal based on the internally adjustable Preset Level for that Zone.

Preset Level Options are as follows: 100%, 80%, 60%, 40% or 20%

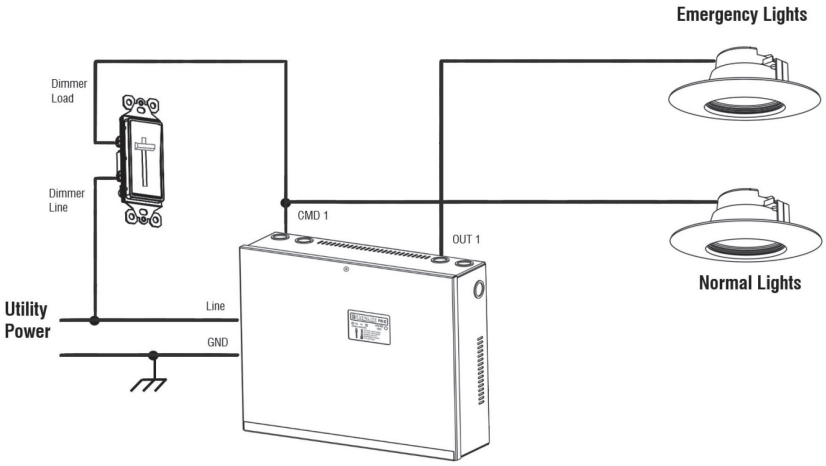

3-Zone Dimming Example

The Diagram below is an example of utilization of the PWII-12's three independent Zones in three separate rooms. In each room there are 5 Emergency Fixtures connected to an Inverter Zone Output. Each fixture represents a 25 Watt fixture, with that same fixture used for both Normal and Emergency application. When in Normal Mode, the inverter directly couples the Dimmer Line Output and Dimmer 0-10V signal to the connected Emergency Fixtures; allowing those fixtures to output up to "Full On" for a maximum pass-through load of 375 Watts. When in Emergency Mode, The PWII will output based upon the Internal Preset Level for each zone bypassing the dimmer control for a total Emergency Load of 100 watts.

Normal Mode (Pass Through)
Room 1 - 5 Fixtures X 25W @ Full On = 125W
Room 2 - 5 Fixtures X 25W @ Full On = 125W
Room 3 - 5 Fixtures X 25W @ Full On = 125W
Total Wattage = 375 Watts

Emergency Mode (Internally Dimmed)
Room 1 - 5 Fixtures X 25W @ 20% Preset = 25W
Room 2 - 5 Fixtures X 25W @ 40% Preset = 50W
Room 3 - 5 Fixtures X 25W @ 20% Preset = 25W
Total Wattage = 100 Watts

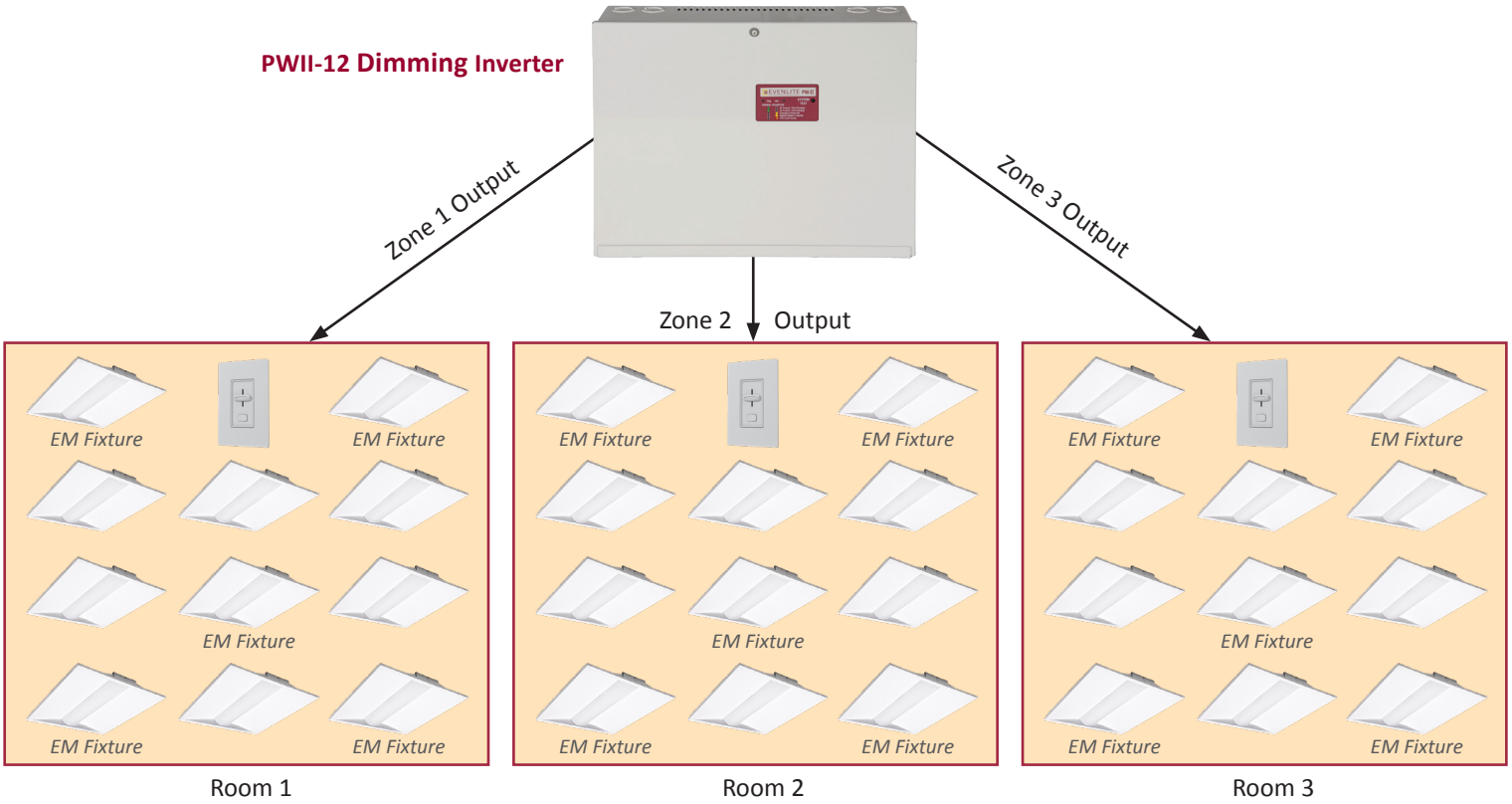

EVENLITE
Lives Depend On Us
www.evenlite.com