EVENLITE

Lives Depend On Us

PROJECT NAME:	APPROVED BY:
CATALOG NO:	TYPE NO:

TELESIS - LED EXIT SIGNS

Universal Mount Edgelit EXIT with 6" ISA

Meets the requirements of the State of Massachusetts

The Telesis TRE is designed to comply with the State of Massachusetts building code requirements, and provide a combined EXIT sign with the 6" International Symbol of Accessibility in a modern edgelit LED sign.

Contemporary styling and the rounded housing provide a distinctive architectural look. Quality construction includes a pure white extruded housing with a high grade clear acrylic legend. The Telesis features a unique die cast aluminum universal mounting canopy which allows for wall or surface ceiling mounting.

Construction

- Attractive, white powder coat finish extruded aluminum housing universal surface mount standard
- Clear acrylic edgelit lens is provided for single face signs, mirrored or white background is available for single or double face signs (required for DF)
- Unique mounting canopy for universal installation on surface ceiling or wall mount applications
- Optional pendant or end mounting available
- Field adjustable chevrons are standard
- Red or Green LED's with 6" letters and 3/4" stroke and 6"
- Matching 6" exit only sign is available, order as TRE6

Electrical

- Maintenance free LED Light source with low energy consumption and long life
- Push to test switch and AC present indicator provided on EM models
- Long life Nickel Cadmium maintenance free battery provides more than 90 minutes of emergency run time
- Operating temperature range of the battery is 10° C to 45° C
- Solid state battery charging circuit recharges the NiCad battery in just 24 hours after a 90 minute discharge
- Universal 120/277 VAC 50/60 HZ field selectable input
- Solid state transfer relay ensures reliability, no relay contacts to oxidize and fail
- Consumes only 2 watts or less for high energy efficiency

Certification

- CSA/US Listed meets UL 924, Massachusetts Building Code , NFPA 101 Life Safety Code, NFPA 70-NEC and OSHA requirements
- Buy American Act compliant

Warranty

- 3 year limited warranty

1011.2.1.2 Accessible Exits: Where exit signs are required by Section 1011.1 of this code,accessible exit doors at the level of exit discharge that lead directly to the accessible paths of exit discharge shall additionally be marked by the International Symbol of Accessibility. Such symbol shall be not less than 6 Inches high and shall be incorporated into the required exit sign or shall be located adjacent to it. Such symbol shall meet the requirements of Section 1011.

ORDERING GUIDE – TRE

Example: TRE-EM-R-1C-W/SC

Model	Operation	Legend Size/Letter Color	Faces/Background	Mounting	Options
TRE Exit with 6" ISA **TRE6** Matching 6" EXIT only sign	**AC** AC Only 120/277 VAC **EM** Battery Backup Emergency	**R** RED Standard 6" EXIT with 6" ISA **G** GREEN Standard 6" EXIT with 6" ISA	**1C** Single Face, Clear Background (standard) **1W** Single Face, White Background **1M** Single Face, Mirrored Background **2M** Double Face, Mirror Background **2W** Double Face White Background	**W/SC** Wall or Surface Ceiling Mount *Note: Double Face Signs Can Be Ceiling or End Mount Only*	**BK** Black Housing **BA** Brushed Aluminum **CC** Custom Color (consult factory) **PK** Pendant Mount Kit (Call for available lengths) **SE** Surface End Mount **SW** Special Wording (consult factory) **2H** Two Hour Run Time **MA** Upright MA approved ISA
TRE					

Fill in fields from categories above and complete type and part number.

Type Number:	***Full Part Number:***

2575 Metropolitan Drive | Trevose, PA 19053 | T: 1.800.872.0879 | F: 215.244.4208 | mail@evenlite.com | www.evenlite.com

Telesis LED Edgelit Exit Sign with 6” ISA

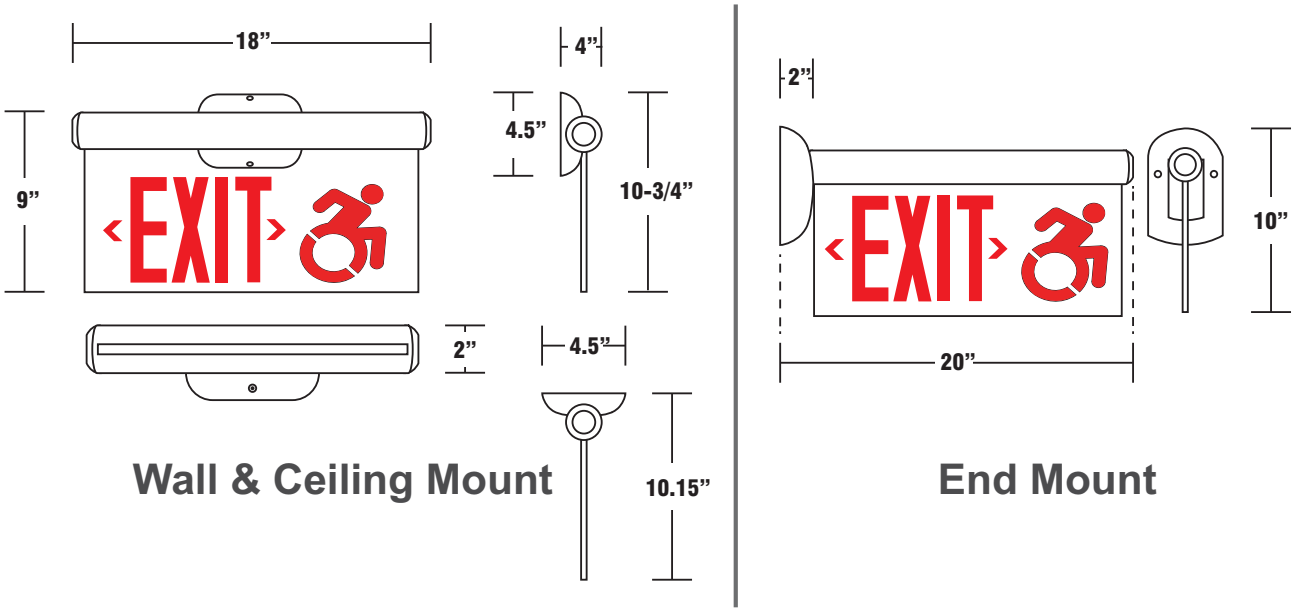

matching 6” exit sign available

EVENLITE

Lives Depend On Us

www.evenlite.com